mLearning

Mobile Learning Content

Each of the following links shows and example of a type of mobile learning content.

- Module >
- Quick Reference >
- Performance Support >
- Web links >

Sustaining focus

Determine what it is that you want to succeed at and commit to that one action with laser like focus. Refuse to be distracted by anyone or anything. Stay committed to the task. Of course there may be occasions when you lose your focus due to changing priorities but do whatever you can to manage these priorities.

Consider the sustainability formula we talked about in the last module:

$$S = B + ESP + EM + EEP + RE + C$$

Unix Quick Reference

List Files and Directories

ls list contents of directory
ls -a include files with "." (dot files)
ls -l list contents in long format (show modes)

Move Files and Directories

mv *src-file dest-file* rename *src-file* to *dest-file*
mv *src-file dest-dir* move a file into a directory
mv *src-dir dest-dir* rename *src-dir*
mv -i *src dest* prompt before overwriting

Copy Files

cp *src-file dest-file* copy *src-file* to *dest-file*
cp *src-file dest-dir* copy a file into a directory
cp -R *src-dir dest-dir* copy one dir into another
cp -i *src dest* prompt before overwriting

Remove File

rm *file* remove (delete) a file
rmdir *dir* remove an empty directory
rm -r *dir* remove a directory and its contents

Main

Wiring diagram

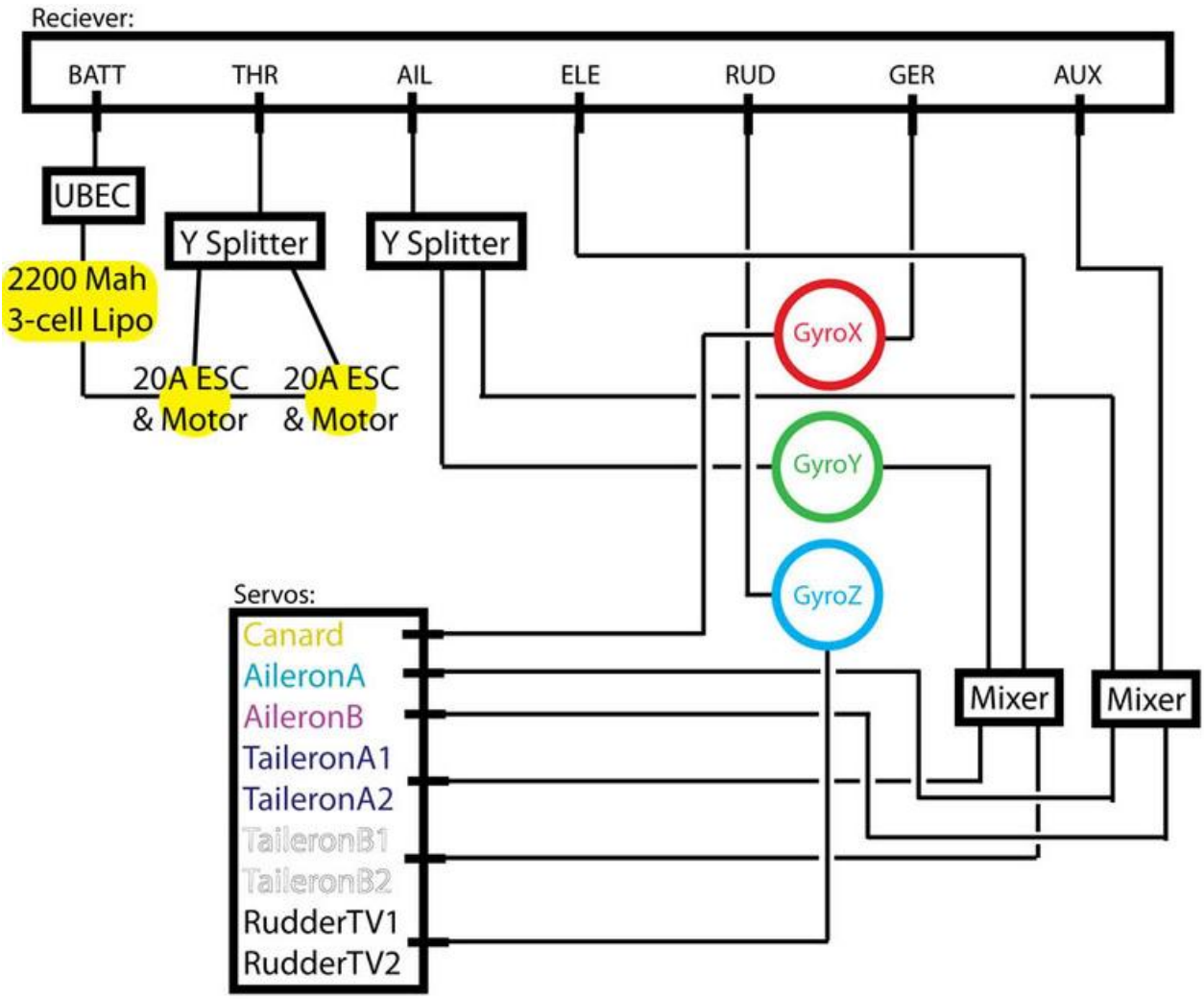

1. Ensure battery is installed
2. Connect the Gyros according to color
3. Wire the mixers to receiver
4. Wire mixers to the Servos
5. Engage motors for 5 seconds
6. Make sure Gyros are engaged
7. Turn main system switch on
8. Have a beer

Interactive wiring diagram

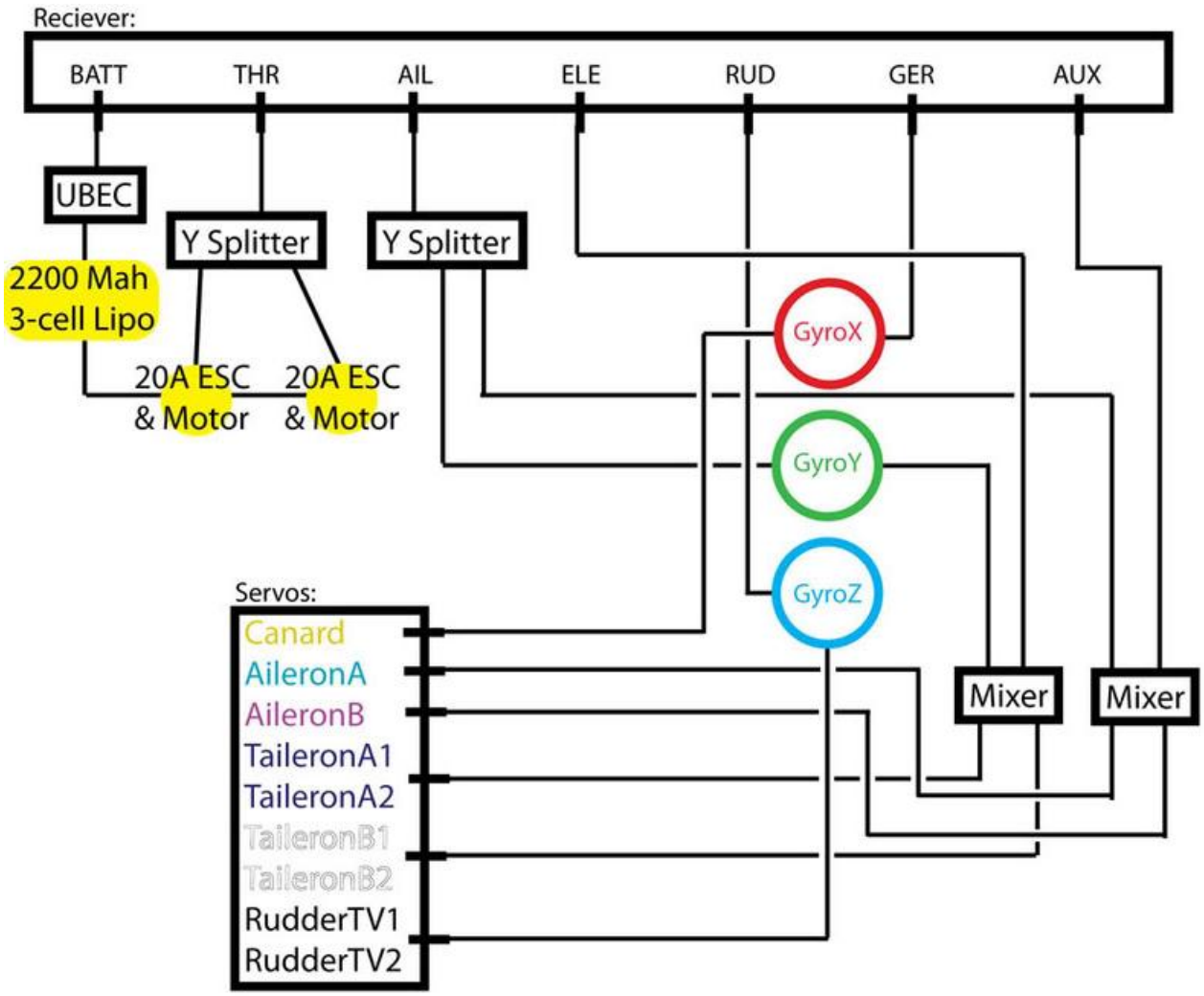

Tap different parts of the screen to learn more about each component. (Splitters, Servos and Gyros)

TED Talks

Sir Ken Robinson

Tap for video

Sir Ken Robinson makes an entertaining and profoundly moving case for creating an education system that nurtures (rather than undermines) creativity.

More about Sir Ken

What’s my favorite ice-cream?

vanilla

chocolate

strawberry

What’s my favorite ice-cream?

No, too fruity…

try again!

What’s my favorite ice-cream?

No, too dull...

try again!

What’s my favorite ice-cream?

Yes, I love chocolate!

continue

Title

Some other title

Some text here. Some text here.

Some text here. Some text here.

Servos

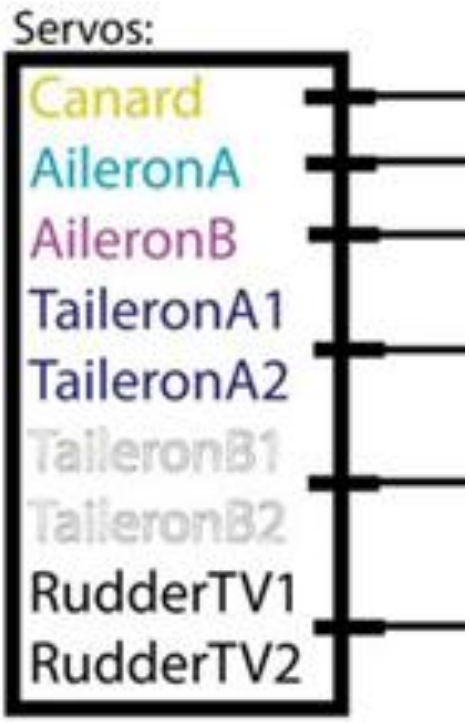

Lorem ipsum dolor sit amet, consectetur adipisicing elit, sed do eiusmod tempor incididunt ut labore et dolore magna aliqua. Ut enim ad minim veniam, quis nostrud exercitation ullamco laboris nisi ut aliquip ex ea commodo consequat.

Back to main diagram

Gyros

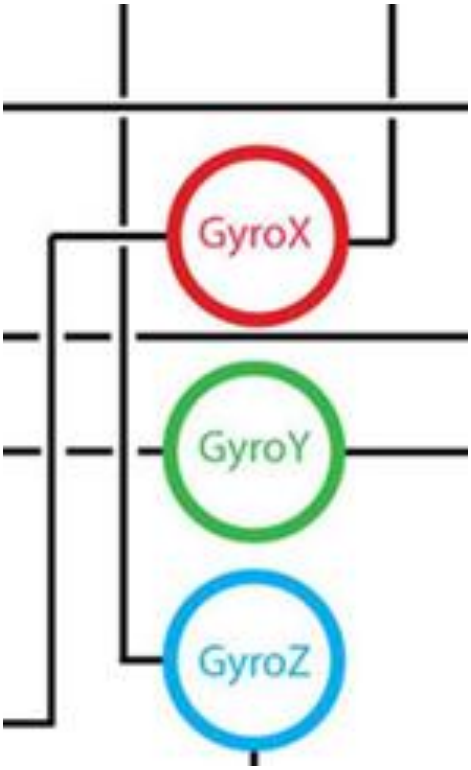

Lorem ipsum dolor sit amet, consectetur adipisicing elit, sed do eiusmod tempor incididunt ut labore et dolore magna aliqua. Ut enim ad minim veniam, quis nostrud exercitation ullamco laboris nisi ut aliquip ex ea commodo consequat.

Back to main diagram

Splitters

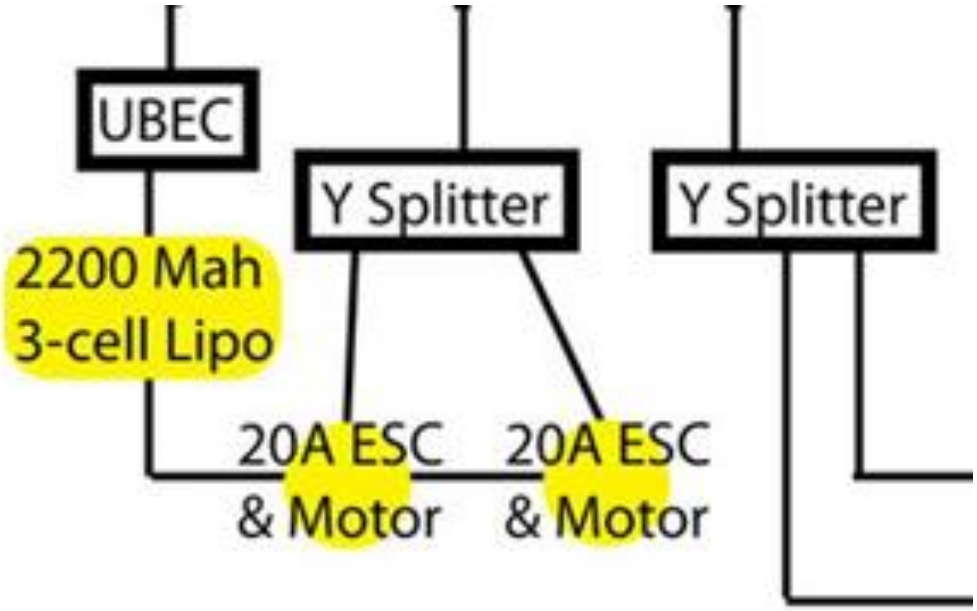

Lorem ipsum dolor sit amet, consectetur adipisicing elit, sed do eiusmod tempor incididunt ut labore et dolore magna aliqua. Ut enim ad minim veniam, quis nostrud exercitation ullamco laboris nisi ut aliquip ex ea commodo consequat.

Back to main diagram